iRGB LED Tube Light Benefits:

- **Outdoor-Proof**
- UV-resistant polycarbonate tubular housing
- **Low profile** / Convenient / Utility
- **Low Cost** Lighting Effects
- Extremely Low Operation Cost / Energy Efficient
- Super Long Life / Zero Maintenance
- Available in lengths of 1000mm, 670mm and 340mm
- 120° viewing angle / **Saturated & Uniform Light** / No Cut-Off
- Application: All Architectural Lighting, Wall Washing, Roof-top Lighting, Stage Decoration Lighting, Boarder-line, Landscaping, etc.

iRGB LED Tube Light

FPU03-RGB72SMD-VE (RGB, 120°)
FPU03-RGB48SMD-VE (RGB, 120°)
FPU03-RGB24SMD-VE (RGB, 120°)
DMX/iRGB Controller

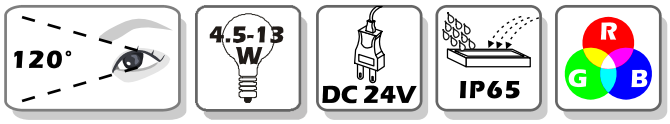

Specification Features

Color Range	Combining different brightness of red, green blue LED produce over 16 million colors
Dimensions	Φ30mm x L340mm Φ30mm x L670mm Φ30mm x L1000mm
Light Source	Ultra Bright 3-in-1 RGB SMD LED
Housing	UV Resistant Polycarbonate tubular housing
Operating Temperature	-20°C to 50°C (-68°F to 122°F)
Starting Temperature	-10°C to 50°C (-50°F to 122°F)
IP Rating	IP 65
LED source life	50, 000 hours
Wiring	Hard wire through side entrance
Connectors	Waterproof IP65
Controller	iRGB Controller / DMX Controller
Weight	300g Max.

Physical Dimensions

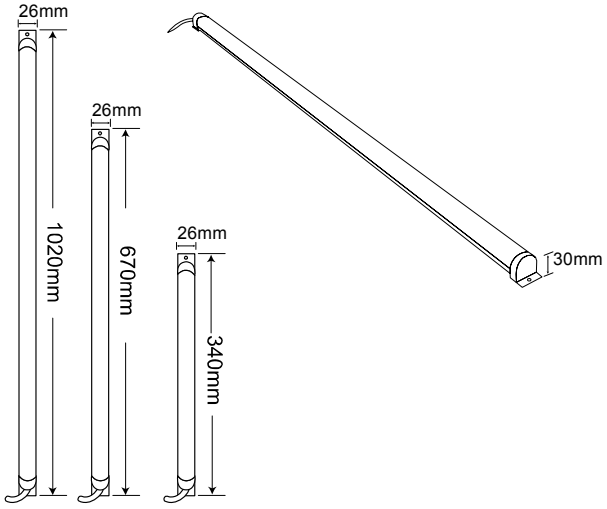

Electrical

Power Input	DC 24V
DC Current	60mA
Total Power Consumption	13W/8.8W/4.5W

Communication

Control Mechanism	DMX Control Device iRGB Control Device
Controller	DMX decoder / iRGB controller
Data Wiring	IP65 Connector

Optical

Lens	None
Beam Angle	120°
Light Distribution	Symmetric direct illumination

Light Output

Color	Wavelength	Color Temp. (Typical)	Luminous Intensity (mcd)	Power Consumption (W)
Red	623-630	-	260~430	4.5~13W
Green	522-525	-	700~900	
Blue	462-468	-	250~380	

Color Vision Int'l Co., Ltd.
16F, No .866-7, Zhong-Zheng Rd. ◦ Zhong-He City ◦ Taipei, Taiwan 235, ROC
TEL: +886-2-2221-3729/2221-2554 ◦ FAX: +886-2-2221-2519 ◦ sales@color-vision.com.tw ◦ www.color-vision.com.tw